Automatica Vol 25 No 6 pp 877–888 1989
Printed in Great Britain

0005–1098/89 $3 00 + 0 00
Pergamon Press plc
© 1989 International Federation of Automatic Control

Adaptive Motion Control of Rigid Robots: a Tutorial*

ROMEO ORTEGA† and MARK W SPONG‡

A number of recent globally convergent adaptive control algorithms for rigid robot manipulators, together with their proofs in a unified tutorial fashion, provide a useful comparison and perspective

Key Words—Adaptive control, robots, parameter estimation, passivity, non-linear control, robustness

Abstract—In this paper we give a tutorial account of several of the most recent adaptive control results for rigid robot manipulators Our intent is to lend some perspective to the growing list of adaptive control results for manipulators by providing a unified framework for comparison of those adaptive control algorithms which have been shown to be globally convergent In most cases we are able to simplify the derivations and proofs of these results as well

1 INTRODUCTION

THE PROBLEM of designing adaptive control laws for rigid robot manipulators that ensure asymptotic trajectory tracking with boundedness of all internal signals has enticed researchers for many years Controllers that achieve this objective for all desired trajectories and all initial conditions are said to be globally convergent It is only recently that adaptive control results have appeared that provide rigorous proofs of global convergence for rigid robots In this paper we give a tutorial account of some of these results It is not our intent to survey the bulk of literature in adaptive control of robots In our opinion once the existence of globally convergent adaptive control laws for rigid robots has been rigorously established, it is difficult to justify other adaptive schemes based on approximate models, linearization along nominal trajectories, assumption of slow parameter variation, etc , that do not satisfy the criterion of global convergence

In the control literature there is no universal agreement as to what does and does not constitute an adaptive control algorithm We have chosen to discuss in this paper only those results that explicitly incorporate parameter estimation in the control law We have not included adaptive control results which have their basis in the theory of variable structure systems, such as the work of Balestrino *et al* (1983) and Singh (1985), and the references therein See also Hsia (1986) for further references

In this paper we will discuss seven results that satisfy the criterion of global convergence Adaptive control laws may be classified on the basis of their control objective and the signal that drives the parameter update law The control objective determines the underlying controller structure the parameters of which are to be updated on-line The update law, in turn, may be driven by a signal that measures either the error between the estimated parameters and the true parameters (i e prediction error) or the error between the desired output and the actual output (i e tracking error) The first four results that we discuss (Craig *et al* , 1986, Spong and Ortega, 1988, Amestegui *et al* , 1987, Middleton and Goodwin, 1988), are adaptive inverse dynamics The term inverse dynamics (also called computed torque) is a special case of the notion of feedback linearization of non-linear systems The control objective, which is achievable in the case when the parameters are known, is to obtain a closed-loop system which is linear and decoupled The update law in Craig *et al* (1986), Spong and Ortega (1988), and Amestegui *et al* (1987) is driven by a tracking error while Middleton and Goodwin (1988) use a prediction error

The second class of results that we discuss (Slotine and Li, 1987a, b, Sadegh and Horowitz, 1987), is conceptually different from the adaptive inverse dynamics in that the control objective is

* Received 25 April 1988, revised 15 November 1988, received in final form 14 March 1989 The original version of this paper was not presented at any IFAC meeting This paper was recommended for publication in revised form by Associate Editor G C Goodwin under the direction of Editor P C Parks

† Universidad Nacional Autonoma de Mexico, UNAM–DEPFI, P O Box 70–256, 04510, Mexico, D F

‡ Coordinated Science Laboratory, University of Illinois at Urbana–Champaign, 1101 W Springfield Avenue, Urbana, IL 61801, U S A Author to whom all correspondence should be addressed

not feedback linearization but only preservation of the passivity properties of the rigid robot in the closed loop To obtain this objective these results effectively exploit the Hamiltonian structure of rigid robot dynamics The final result that we discuss (Kelly and Carelli, 1988), is intermediate between the other two classes, in the sense that an inverse dynamics controller is used together with the addition of a term that allows preservation of the passivity of the closed-loop system The choice of this additional feedback is again dictated by the Hamiltonian structure of the dynamic equations of motion The last three papers mentioned above all use a tracking error driven adaptation law

The present paper is organized as follows In Section 2 we discuss the Lagrangian formulation of rigid robot dynamics, and describe some of the key structural properties of robot dynamics used in adaptive control This is done to make the paper self-contained and to set the notation for the remainder of the paper Section 3 discusses the adaptive inverse dynamics results of Craig *et al* (1986), Spong and Ortega (1988), Amestegui *et al* (1987), and Middleton and Goodwin (1988), while Section 4 discusses the results of Slotine and Li (1987a,b), Sadegh and Horowitz (1987), and Kelly and Carelli (1988) In each case we first discuss the algorithm in the known parameter case The known parameter case provides a "best case" upper bound of the performance obtainable Indeed, there is little hope to derive stable adaptive control laws if the known parameter case is unstable or otherwise poorly behaved For the most part the proofs of stability of the adaptive control laws are taken from the appropriate references, but, in some cases we have been able to simplify and/or streamline the proofs Finally, in Section 5, we discuss some extensions and open problems

In what follows we will use the following standard notation and terminology (Desoer and Vidyasagar, 1975) $\mathbf{R}_+$ denotes the set of non-negative real numbers, and $\mathbf{R}^n$ the usual n-dimensional vector space over $\mathbf{R}$ endowed with the Euclidean norm

$$\|\mathbf{x}\| = \left(\sum_{j=1}^{n} |x_j|^2\right)^{1/2} \tag{1}$$

We define the standard Lebesgue spaces L_∞ and L_2 as $L_\infty^n(\mathbf{R}_+) = \{f\ \mathbf{R}_+ \to \mathbf{R}^n$ such that f is Lebesgue measurable and $\|f\|_\infty < \infty\}$ where the L_∞^n-norm, $\|f\|_\infty$, is defined by

$$\|f\|_\infty = \operatorname*{ess\,sup}_{t\in[0\ \infty)} \|f(t)\| \tag{2}$$

$L_2^n(\mathbf{R}_+) = \{f\ \mathbf{R}^+ \to \mathbf{R}^n$ such that f is Lebesgue measurable and $\|f\|_2 < \infty\}$ where the L_2^n-norm, $\|f\|_2$, is defined by

$$\|f\|_2 = \int_0^\infty \|f(t)\|^2\, dt \tag{3}$$

Definition 1 A mapping $\mathbf{x} \to \mathbf{y}$ is said to be *passive* if and only if

$$\langle \mathbf{x} \mid \mathbf{y} \rangle_T = \int_0^T \mathbf{x}^T \mathbf{y}\, dt \geq -\beta \tag{4}$$

for some $\beta > 0$, for all T

We will use the standard abuse of notation that, if $H(s)$ is a transfer function in the Laplace variable s of a (Laplace transformable) function $h(t)$ and $r(t)$ is a function of time, then $H(s)r$ will stand for $(h * r)(t)$, where $*$ denotes the convolution product With this notation then we can state Lemma 1

Lemma 1 (*Desoer and Vidyasagar*, 1975) Let

$$\mathbf{e} = H(s)\mathbf{r} \tag{5}$$

where $H(s)$ is an $n \times m$ strictly proper, exponentially stable transfer function Then $\mathbf{r} \in L_2^m$ implies that $\mathbf{e} \in L_2^n \cap L_\infty^n$, $\dot{\mathbf{e}} \in L_2^n$, $\mathbf{e}$ is continuous, and $\mathbf{e} \to 0$ as $t \to \infty$ If, in addition, $\mathbf{r} \to 0$ as $t \to \infty$, then $\mathbf{e} \to 0$

2 DYNAMICS OF RIGID ROBOTS

2 1 *Euler–Lagrange equations*

A standard method for deriving the dynamic equations of mechanical systems is via the so-called Euler–Lagrange equations (see Spong and Vidyasagar (1989) for details)

$$\frac{d}{dt}\frac{\partial L}{\partial \dot{\mathbf{q}}} - \frac{\partial L}{\partial \mathbf{q}} = \boldsymbol{\tau} \tag{6}$$

where $\mathbf{q} = (q_1, \quad , q_n)^T$ is a set of generalized coordinates for the system, L, the Lagrangian, is the difference, $K - P$, between the kinetic energy K and the potential energy P, and $\boldsymbol{\tau} = (\tau_1, \quad , \tau_n)^T$ is the vector of generalized forces acting on the system An important special case, which is true of robot manipulators, arises when the potential energy $P = P(\mathbf{q})$ is independent of $\mathbf{q}$, and when the kinetic energy is a quadratic function of the vector $\dot{\mathbf{q}}$ of the form

$$K = \tfrac{1}{2}\sum_{i\,j}^{n} d_{ij}(\mathbf{q}) q_i q_j = \tfrac{1}{2}\dot{\mathbf{q}}^T D(\mathbf{q})\dot{\mathbf{q}} \tag{7}$$

where the $n \times n$ "inertia matrix" $D(\mathbf{q})$ is symmetric and positive definite for each $\mathbf{q} \in \mathbf{R}^n$ The generalized coordinates in this case are the joint positions

The Euler–Lagrange equations for such a system can be derived as follows Since

$$L = K - P = \tfrac{1}{2}\sum_{i\,j} d_{ij}(\mathbf{q}) q_i q_j - P(\mathbf{q}) \tag{8}$$

we have that

$$\frac{\partial L}{\partial q_k} = \sum_j d_{kj}(\mathbf{q})q_j \tag{9}$$

and

$$\frac{\mathrm{d}}{\mathrm{d}t}\frac{\partial L}{\partial q_k} = \sum_j d_{kj}(\mathbf{q})q_j + \sum_j \frac{\mathrm{d}}{\mathrm{d}t} d_{kj}(\mathbf{q})q_j$$
$$= \sum_j d_{kj}(\mathbf{q})q_j + \sum_{i,j} \frac{\partial d_{kj}}{\partial q_i}\dot{q}_i q_j \tag{10}$$

Also

$$\frac{\partial L}{\partial q_k} = \tfrac{1}{2}\sum_{i,j} \frac{\partial d_{ij}}{\partial q_k} q_i q_j - \frac{\partial P}{\partial q_k} \tag{11}$$

Thus the Euler–Lagrange equations can be written as

$$\sum_j d_{kj}(\mathbf{q})q_j + \sum_{i,j}\left\{\frac{\partial d_{kj}}{\partial q_i} - \frac{1}{2}\frac{\partial d_{ij}}{\partial q_k}\right\}q_i\dot{q}_j - \frac{\partial P}{\partial q_k} = \tau_k, \quad k = 1, \quad , n. \tag{12}$$

By interchanging the order of summation in the second term above and taking advantage of the symmetry of the inertia matrix, we can show that

$$\sum_{i,j}\left\{\frac{\partial d_{kj}}{\partial q_i} - \frac{1}{2}\frac{\partial d_{ij}}{\partial q_k}\right\}q_i q_j$$
$$= \sum_{i,j}\frac{1}{2}\left\{\frac{\partial d_{kj}}{\partial q_i} + \frac{\partial d_{ki}}{\partial q_j} - \frac{\partial d_{ij}}{\partial q_k}\right\}q_i q_j. \tag{13}$$

The coefficients

$$c_{ijk} = \frac{1}{2}\left\{\frac{\partial d_{kj}}{\partial q_i} + \frac{\partial d_{ki}}{\partial q_j} - \frac{\partial d_{ij}}{\partial q_k}\right\} \tag{14}$$

in (14) are known as *Christoffel symbols* (of the first kind). If we set

$$\phi_k = \frac{\partial P}{\partial q_k} \tag{15}$$

then we can write the Euler–Lagrange equations (12) as

$$\sum_j d_{kj}(\mathbf{q})q_j + \sum_{i,j} c_{ijk}(\mathbf{q})q_i q_j + \phi_k(\mathbf{q}) = \tau_k, \quad k = 1, \quad , n \tag{16}$$

In the above equation, there are three types of terms The first involve the second derivative of the generalized coordinates The second are quadratic terms in the first derivatives of $\mathbf{q}$, where the coefficients may depend on $\mathbf{q}$ These are further classified into two types. Terms involving a product of the type q_i^2 are called *centrifugal*, while those involving a product of the type $q_i q_j$, where $i \neq j$, are called *Coriolis* terms The third type of terms are those involving only $\mathbf{q}$ but not its derivatives Clearly the latter arise from differentiating the potential energy It is common to write (16) in matrix form as

$$D(\mathbf{q})\ddot{\mathbf{q}} + C(\mathbf{q}, \dot{\mathbf{q}})\dot{\mathbf{q}} + \mathbf{g}(\mathbf{q}) = \boldsymbol{\tau} \tag{17}$$

where the kjth element of the matrix $C(\mathbf{q}, \mathbf{q})$ is defined as

$$c_{kj} = \sum_{i=1}^{n} c_{ijk}(\mathbf{q})q_i = \sum_{i=1}^{n}\frac{1}{2}\left\{\frac{\partial d_{kj}}{\partial q_i} + \frac{\partial d_{ki}}{\partial q_j} - \frac{\partial d_{ij}}{\partial q_k}\right\}q_i \tag{18}$$

2.2. *Fundamental properties*

Although the equations of motion (17) are complex, non-linear equations for all but the simplest robots, they have several fundamental properties which can be exploited to facilitate control system design We state these properties as follows

Property 1 The inertia matrix $D(\mathbf{q})$ is symmetric, positive definite, and both $D(\mathbf{q})$ and $D(\mathbf{q})^{-1}$ are uniformly bounded as a function of $\mathbf{q} \in \mathbf{R}^n$. Strictly speaking, boundedness of the inertia matrix requires, in general, that all joints be revolute To avoid such technical difficulties we will henceforth treat only revolute joint robots

Property 2 There is an independent control input for each degree of freedom.

Property 3 All of the constant parameters of interest such as link masses, moments of inertias, etc., appear as coefficients of known functions of the generalized coordinates By defining each coefficient as a separate parameter, a linear relationship results so that we may write the dynamic equations (17) as

$$D(\mathbf{q})\ddot{\mathbf{q}} + C(\mathbf{q}, \dot{\mathbf{q}})\dot{\mathbf{q}} + \mathbf{g}(\mathbf{q}) = Y(\mathbf{q}, \dot{\mathbf{q}}, \ddot{\mathbf{q}})\boldsymbol{\theta} = \boldsymbol{\tau} \tag{19}$$

where $Y(\mathbf{q}, \dot{\mathbf{q}}, \ddot{\mathbf{q}})$ is an $n \times r$ matrix of known functions, known as the *regressor*, and $\boldsymbol{\theta}$ is an r-dimensional vector of parameters (See An *et al* (1985) and Khosla and Kanade (1985))

Property 4 Define the matrix $N(\mathbf{q}, \dot{\mathbf{q}}) = D(\mathbf{q}) - 2C(\mathbf{q}, \dot{\mathbf{q}})$ Then $N(\mathbf{q}, \dot{\mathbf{q}})$ is skew symmetric, i e the components n_{jk} of N satisfy $n_{jk} = -n_{kj}$

Proof Given the inertia matrix $D(\mathbf{q})$, the kjth component of $D(\mathbf{q})$ is given by the chain rule as

$$\dot{d}_{kj} = \sum_{i=1}^{n}\frac{\partial d_{kj}}{\partial q_i}q_i \tag{20}$$

Therefore, the kjth component of $N = D - 2C$ is

given by

$$\begin{aligned} n_{kj} &= d_{kj} - 2c_{kj} \\ &= \sum_{i=1}^{n} \left[\frac{\partial d_{kj}}{\partial q_i} - \left\{ \frac{\partial d_{kj}}{\partial q_i} + \frac{\partial d_{ki}}{\partial q_j} - \frac{\partial d_{ij}}{\partial q_k} \right\} \right] q_i \\ &= \sum_{i=1}^{n} \left[\frac{\partial d_{ij}}{\partial q_k} - \frac{\partial d_{ki}}{\partial q_j} \right] q_i \end{aligned} \tag{21}$$

Since the inertia matrix $D(\mathbf{q})$ is symmetric, i e $d_{ij} = d_{ji}$ it follows from (21) by interchanging the indices k and j that

$$n_{jk} = -n_{kj} \tag{22}$$

Remark The skew symmetry property (Property 4) is a source of some confusion in the robotics literature and some further clarification is therefore in order Note that we have defined the matrix C using the Christoffel symbols, from which Property 4 follows easily Given the equations of motion (12), other definitions of C are, of course, possible For example, inspecting (12) we might choose the entries of C, as some authors have done, as

$$c_{kj} = \sum_i \left\{ \frac{\partial d_{kj}}{\partial q_i} - \frac{1}{2} \frac{\partial d_{ij}}{\partial q_k} \right\} q_i \tag{23}$$

It turns our, no matter how C is defined in (17), it is *always true* that

$$\mathbf{q}^T (D - 2C)\dot{\mathbf{q}} = 0 \tag{24}$$

However, $D - 2C$ is itself skew symmetric only in the case that C is defined according to (17)

To show that (24) holds independent of the definition of C in (17), we define the *Hamiltonian* H using the so-called *Legendre transformation*

$$H = \mathbf{p}^T \mathbf{q} - L(\mathbf{q}, \mathbf{q}) \tag{25}$$

where L is the Lagrangian and $\mathbf{p}$ the *generalized momentum* defined as

$$\mathbf{p} = \frac{\partial L}{\partial \mathbf{q}} \tag{26}$$

Using Lagrange's equations it then follows that H is the sum of the kinetic and potential energies, i e

$$\begin{aligned} H &= \tfrac{1}{2} \sum_{ij} d_{ij}(\mathbf{q}) q_i q_j + P(\mathbf{q}) \\ &= \tfrac{1}{2} \mathbf{q}^T D(\mathbf{q}) \mathbf{q} + P(\mathbf{q}) \end{aligned} \tag{27}$$

Again using Lagranges equations, it is easy to derive Hamilton's equations for the system

$$q_i = \frac{\partial H}{\partial p_i} \tag{28}$$

$$p_i = -\frac{\partial H}{\partial q_i} + \tau_i, \quad i = 1, \quad , n \tag{29}$$

Using the above equations (28) and (29), it follows that the total derivative

$$\frac{\mathrm{d}H}{\mathrm{d}t} = \sum_i \frac{\partial H}{\partial q_i} q_i + \sum_i \frac{\partial H}{\partial q_i} p_i = \mathbf{q}^T \boldsymbol{\tau} \tag{30}$$

On the other hand, from (27) it follows that

$$\begin{aligned} \frac{\mathrm{d}H}{\mathrm{d}t} &= \mathbf{q}^T D \dot{\mathbf{q}} + \tfrac{1}{2} \dot{\mathbf{q}}^T D \dot{\mathbf{q}} + \frac{\partial P}{\partial \mathbf{q}} \dot{\mathbf{q}} \\ &= \dot{\mathbf{q}}^T \boldsymbol{\tau} + \tfrac{1}{2} \mathbf{q}^T (D - 2C) \dot{\mathbf{q}} \end{aligned} \tag{31}$$

where the last equality is obtained by substituting the expression for $D\ddot{\mathbf{q}}$ from (17) Thus, comparing (30) with (31) we have that

$$\dot{\mathbf{q}}^T (D - 2C)\dot{\mathbf{q}} = 0 \tag{32}$$

independent of the manner in which C is defined.

The property (32) is simply a statement that the so-called *fictitious forces*, defined by $C(\mathbf{q}, \dot{\mathbf{q}})\dot{\mathbf{q}}$, do no work on the system An important consequence of this is the following

Proposition 1 The dynamic equations (17) of a rigid robot define a passive mapping $\boldsymbol{\tau} \to \mathbf{q}$, i e

$$\langle \dot{\mathbf{q}} \mid \boldsymbol{\tau} \rangle_T = \int_0^T \dot{\mathbf{q}}^T \boldsymbol{\tau} \, \mathrm{d}t \geq -\beta \tag{33}$$

for some $\beta > 0$, for all T

Proof From (30) we have

$$\int_0^T \dot{\mathbf{q}}^T \boldsymbol{\tau} \, \mathrm{d}t = \int_0^T \mathrm{d}H = H(T) - H(0) \geq -H(0) \tag{34}$$

since $H(T)$ is nonnegative for all T

It is this property (34), or equivalently (30), that is referred to in the literature as the passive structure of rigid robots

All of the adaptive control results in this paper rely on Property 1 that the inertia matrix is symmetric, positive definite, on Property 2 that there is an independent input for each degree of freedom, and on Property 3 that the system is linear in the unknown parameters Therefore, we will divide them according to whether or not they also rely on the skew symmetry (Property 4)

3 INVERSE DYNAMICS BASED CONTROL

All of the control algorithms in this paper can be implemented according to the inner loop/outer loop structure shown in Fig 1 The inner loop block is a non-linear state feedback control law and the outer loop is typically a linear compensator driven by the tracking error We first investigate control methods based on the so-called method of inverse dynamics, or computed torque

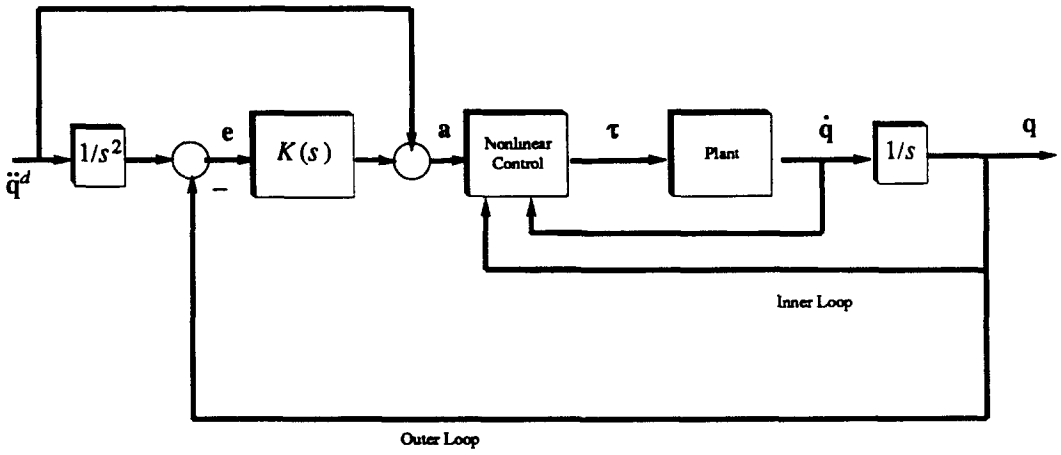

FIG 1 Inner loop/outer loop structure of non-linear control algorithm

3 1 *Known parameter case*

Inverse dynamics based control schemes do not exploit the skew symmetry (Property 4), but rely instead on exact cancellation of all nonlinearities in the system so that, in the ideal case, the closed-loop system is linear and decoupled Inspecting (17) we see that if the (inner loop) control $\boldsymbol{\tau}$ is chosen as

$$\boldsymbol{\tau} = D(\mathbf{q})\mathbf{a} + \mathbf{C}(\mathbf{q}, \dot{\mathbf{q}})\dot{\mathbf{q}} + \mathbf{g}(\mathbf{q}) \tag{35}$$

then, by substituting (35) into (17) one obtains

$$D(\mathbf{q})(\dot{\mathbf{q}} - \mathbf{a}) = 0 \tag{36}$$

and Property 1 implies that

$$\dot{\mathbf{q}} = \mathbf{a} \tag{37}$$

The term $\mathbf{a}$ has the interpretation of an outer loop control law with units of acceleration, which can be defined in terms of a given linear dynamic compensator $K(s)$ as

$$\mathbf{a} = \dot{\mathbf{q}}^d - K(s)\mathbf{e} \tag{38}$$

with $\mathbf{e} = \mathbf{q} - \mathbf{q}^d$, where $\mathbf{q}^d(t)$ is an n-dimensional vector of desired joint trajectories Substituting (38) into (37) leads to the linear error equation

$$[s^2 I + K(s)]\mathbf{e} = 0 \tag{39}$$

The simplest choice of $K(s)$ in (38) is a PD-compensator

$$K(s) = K_v s + K_p \tag{40}$$

which leads to the familiar second-order error equation

$$\mathbf{e} + K_v\mathbf{e} + K_p\mathbf{e} = 0 \tag{41}$$

If the gain matrices K_v, and K_p are chosen as diagonal matrices with positive diagonal elements then the closed-loop system is linear, decoupled, and exponentially stable Global stability for this scheme is thus obvious In fact the closed-loop damping ratio and natural frequency may be arbitrarily assigned The freedom allowed by the compensator $K(s)$ in (38) may be used to shape the error transients or, as shown in Spong and Vidyasagar (1987), to improve the robustness of the inverse dynamics scheme

3.2. *Adaptive case*

We review below four different versions of adaptive inverse dynamics control, namely, Craig *et al* (1986), Spong and Ortega (1988), Amestegui *et al* (1987), and Middleton and Goodwin (1988) We break up the discussion into three parts, according to the assumptions and measurements needed for the implementation of the control law The first result (Craig *et al*, 1986) requires both measurement of the joint acceleration and modification of the adaptation algorithm to insure boundedness of the inverse of the estimated inertia matrix The second result (Spong and Ortega, 1988) removes the requirement of Craig *et al* (1986) on boundedness of the estimated inertia matrix The third result (Amestegui *et al*, 1987) also removes the requirement on boundedness of the estimated inertia matrix, but uses a different parameter update law The final result in this section (Middleton and Goodwin, 1988) removes the requirement on measurement of the joint acceleration but still requires boundedness of the inverse of the estimated inertia matrix

3 2 1 *Control assuming acceleration measurement and boundedness of the inverse of the estimated inertia* The adaptive implementation of (35)–(38) proposed in Craig *et al* (1986) is obtained by replacing D, C, and $\mathbf{g}$ by their estimates, i e

$$\begin{aligned} \boldsymbol{\tau} &= \hat{D}(\mathbf{q})\mathbf{a} + C(\mathbf{q}, \dot{\mathbf{q}})\dot{\mathbf{q}} + \hat{\mathbf{g}}(\mathbf{q}) \\ \mathbf{a} &= \ddot{\mathbf{q}}^d - K_v\dot{\mathbf{e}} - K_p\mathbf{e} \end{aligned} \tag{42}$$

We assume that $\hat{D}$, $\hat{C}$, and $\hat{\mathbf{g}}$ have the same functional form as D, C, $\mathbf{g}$ with estimated parameters $\hat{\theta}_1, \quad , \hat{\theta}_r$ Thus

$$\hat{D}\dot{\mathbf{q}} + \hat{C}\mathbf{q} + \hat{\mathbf{g}} = Y(\mathbf{q}, \dot{\mathbf{q}}, \dot{\mathbf{q}})\hat{\boldsymbol{\theta}} \tag{43}$$

where $\hat{\boldsymbol{\theta}}$ is the vector of estimated parameters

Substituting (42) into (17) gives

$$D\ddot{\mathbf{q}} + C\dot{\mathbf{q}} + \mathbf{g} = \hat{D}(\dot{\mathbf{q}}^{\mathrm{d}} - K_v\mathbf{e} - K_p\mathbf{e}) + \hat{C}\dot{\mathbf{q}} + \hat{\mathbf{g}} \tag{44}$$

Adding and subtracting $\hat{D}\mathbf{q}$ on the left-hand side of (44) and using (43) we can write

$$\hat{D}(\ddot{\mathbf{e}} + K_v\mathbf{e} + K_p\mathbf{e}) = \tilde{D}\ddot{\mathbf{q}} + \tilde{C}\dot{\mathbf{q}} + \tilde{\mathbf{g}} = Y(\mathbf{q}, \mathbf{q}, \ddot{\mathbf{q}})\tilde{\boldsymbol{\theta}} \tag{45}$$

where $(\tilde{\ }) = (\hat{\ }) - (\cdot)$ Finally the error dynamics may be written as

$$\ddot{\mathbf{e}} + K_v\dot{\mathbf{e}} + K_p\mathbf{e} = \hat{D}^{-1}Y\tilde{\boldsymbol{\theta}} = \Phi\tilde{\boldsymbol{\theta}} \tag{46}$$

We may write the system (46) in state space as

$$\mathbf{x} = A\mathbf{x} + B\Phi\tilde{\boldsymbol{\theta}} \tag{47}$$

where A is the Hurwitz matrix

$$A = \begin{bmatrix} 0 & I \\ -K_p & -K_v \end{bmatrix}, \quad \text{and} \quad B = \begin{bmatrix} 0 \\ I \end{bmatrix}, \quad \mathbf{x} = \begin{bmatrix} \mathbf{e} \\ \dot{\mathbf{e}} \end{bmatrix} \tag{48}$$

In Craig *et al* (1986) it is assumed that $\mathbf{q}$ is measurable and that the update law is modified to insure that $\hat{D}^{-1}$ is bounded See Craig (1988) for further details Under these assumptions we have the following

Theorem 1 Choose the update law

$$\tilde{\boldsymbol{\theta}} = -\Gamma^{-1}\Phi^T B^T P\mathbf{x} \tag{49}$$

where $\Gamma = \Gamma^T > 0$ and P is the unique symmetric positive definite solution to the Lyapunov equation

$$A^T P + PA + Q = 0 \tag{50}$$

for a given symmetric, positive definite Q Under these conditions then, the solution $\mathbf{x}$ of (47) satisfies

$$\mathbf{x} \to 0 \quad \text{as} \quad t \to \infty \tag{51}$$

with all signals remaining bounded

Proof Choose the Lyapunov function candidate

$$V = x^T P\mathbf{x} + \tilde{\boldsymbol{\theta}}^T\Gamma\tilde{\boldsymbol{\theta}} \tag{52}$$

The time derivative of V along trajectories of (47) is computed to be

$$V = -\mathbf{x}^T Q\mathbf{x} + 2\tilde{\boldsymbol{\theta}}^T[\Phi^T B^T P\mathbf{x} + \Gamma\tilde{\boldsymbol{\theta}}] \tag{53}$$

Using the parameter update law (49) this reduces to

$$V = -\mathbf{x}^T Q\mathbf{x} \leq 0 \tag{54}$$

This shows that $\mathbf{x} \in L_2^{2n} \cap L_\infty^{2n}$ and $\tilde{\boldsymbol{\theta}} \in L_\infty^r$ From this we conclude from (42) that $\boldsymbol{\tau} \in L_\infty^n$ This in turn implies, using (17) and Property 1, that $\mathbf{q} \in L_\infty^n$, and, hence, from (47) that $\mathbf{x} \in L_\infty^{2n}$ Since $\dot{\mathbf{x}} \in L_\infty^{2n}$, $\mathbf{x}$ is uniformly continuous and the proof is completed using the implication

$$\begin{gathered} \mathbf{x} \text{ uniformly continuous, } \mathbf{x} \in L_2^{2n} \\ \text{implies } \mathbf{x} \to 0 \text{ as } t \to \infty \end{gathered} \tag{55}$$

3 2.2 *Control assuming only measurement of acceleration* The two main drawbacks of the result in the previous section are the need to measure the acceleration $\ddot{\mathbf{q}}$ in order to realize the update law (49) and the requirement that $\hat{D}$ remain uniformly positive definite We can remove the second drawback above for revolute joint robots by following the approach of Spong and Ortega (1988) which is the approach typically used in robust non-adaptive control (see, e g Spong and Vidyasagar (1987)) In this approach we choose an inverse dynamics control law of the form

$$\boldsymbol{\tau} = D_0(\mathbf{q})(\mathbf{a} + \delta\mathbf{a}) + C_0(\mathbf{q}, \dot{\mathbf{q}})\mathbf{q} + \mathbf{g}_0 \tag{56}$$

where $D_0 = D_0^T > 0$, C_0, $\mathbf{g}_0$ are a priori estimates of D, C, $\mathbf{g}$, respectively, with fixed parameters, $\mathbf{a}$ is given by (38), and $\delta\mathbf{a}$ is an additional outer loop control that compensates for the deviations ΔD, ΔC, $\Delta\mathbf{g}$, where $\Delta(\ ) = (\ )_0 - (\ )$ In the present set-up $\delta\mathbf{a}$ is chosen adaptively It is important to note that the terms D_0, C_0, $\mathbf{g}_0$ in (56) are not updated on-line and hence the invertibility of D_0 is not an issue

If we now combine (56) with (17) we have an equation similar to (45)

$$\begin{aligned} D_0(\ddot{\mathbf{e}} + K_v\dot{\mathbf{e}} + K_p\mathbf{e} - \delta\mathbf{a}) &= \Delta D\ddot{\mathbf{q}} + \Delta C\mathbf{q} + \Delta\mathbf{g} \\ &= Y(\mathbf{q}, \dot{\mathbf{q}}, \dot{\mathbf{q}})\Delta\boldsymbol{\theta} \end{aligned} \tag{57}$$

where the last equality is obtained using Property 3 of linearity in the parameters Note, in (57), that $\Delta\boldsymbol{\theta} = \boldsymbol{\theta}_0 - \boldsymbol{\theta}$ is a fixed vector in $\mathbf{R}^n$ and not a function of time, since the terms in (56) are fixed estimates Finally we write

$$\ddot{\mathbf{e}} + K_v\dot{\mathbf{e}} + K_p\mathbf{e} = D_0^{-1}Y\Delta\boldsymbol{\theta} + \delta\mathbf{a} = \Phi_0\Delta\boldsymbol{\theta} + \delta\mathbf{a}. \tag{58}$$

Choosing the control $\delta\mathbf{a}$ as

$$\delta\mathbf{a} = -\Phi_0\Delta\hat{\boldsymbol{\theta}} \tag{59}$$

yields an equation identical to (47) with Φ replaced by Φ_0 Note that $\Delta\tilde{\boldsymbol{\theta}} = \tilde{\boldsymbol{\theta}}$ and that now Φ_0 is not a function of the estimated parameters since D_0 is fixed Choosing an update law for $\Delta\hat{\boldsymbol{\theta}}$

according to

$$\Delta\dot{\hat{\boldsymbol{\theta}}} = -\Gamma^{-1}\Phi_0^T B^T P\mathbf{x} \tag{60}$$

where P satisfies (50), and choosing a Lyapunov function candidate

$$V = \mathbf{x}^T P\mathbf{x} + \Delta\tilde{\boldsymbol{\theta}}^T\Gamma\Delta\tilde{\boldsymbol{\theta}} = \mathbf{x}^T P\mathbf{x} + \tilde{\boldsymbol{\theta}}^T\Gamma\tilde{\boldsymbol{\theta}} \tag{61}$$

a proof identical to that of Theorem 1 shows that $\mathbf{x}\to 0$ as $t\to\infty$, with all signals remaining bounded

This approach is similar to that of Amestegui *et al.* (1987), but the update law is that of Craig *et al.* (1986) The actual control scheme contained in Amestegui *et al* (1987) is of the form

$$\boldsymbol{\tau} = D_0(\mathbf{q})\mathbf{a} + C_0(\mathbf{q},\mathbf{q})\dot{\mathbf{q}} + \mathbf{g}_0(\mathbf{q}) + \mathbf{u} \tag{62}$$

where D_0, C_0, $\mathbf{g}_0$, $\mathbf{a}$ are as in (57) and $\mathbf{u}$ is an additional signal to be designed. Substituting (62) into (17) gives

$$\Delta D\ddot{\mathbf{q}} + \Delta C\dot{\mathbf{q}} + \Delta\mathbf{g} = \boldsymbol{\epsilon} + \mathbf{u} = Y\Delta\boldsymbol{\theta} \tag{63}$$

where

$$\boldsymbol{\epsilon} = D_0(\mathbf{v} - \ddot{\mathbf{q}}). \tag{64}$$

The following adaptive compensation signal is proposed in Amestegui *et al* (1987)·

$$\mathbf{u} = Y\widehat{\Delta\boldsymbol{\theta}} \tag{65}$$

with the update law

$$\widehat{\Delta\boldsymbol{\theta}} = \Gamma^{-1}Y^T\boldsymbol{\epsilon} \tag{66}$$

With the preceding control structure we can then prove the following

Theorem 2 Consider the robot dynamics (17) in closed loop with the controller (62), (65) and update law (64), (66). Then, assuming that a solution of (66) is defined for $t\in[t_0,\infty)$, we have

$$\mathbf{e},\dot{\mathbf{e}}\to 0 \quad \text{as} \quad t\to\infty \tag{67}$$

with all signals remaining bounded

Proof First note from (64) and (65) that we can write

$$\boldsymbol{\epsilon} = -Y\widetilde{\Delta\boldsymbol{\theta}} \tag{68}$$

and consider the Lyapunov function

$$V = \widetilde{\Delta\boldsymbol{\theta}}^T\Gamma\widetilde{\Delta\boldsymbol{\theta}} \tag{69}$$

Then V satisfies

$$V = -\widetilde{\Delta\boldsymbol{\theta}}Y^TY\widetilde{\Delta\boldsymbol{\theta}} \leq 0 \tag{70}$$

which implies that $\boldsymbol{\epsilon}\in L_2^n\cap L_\infty^n$ and $\widetilde{\Delta\boldsymbol{\theta}}\in L_\infty^r$. On the other hand, using (38), (64) and invertibility of D_0 yields

$$\mathbf{e} = (s^2I + K_v s + K_p)^{-1}D_0^{-1}\boldsymbol{\epsilon} \tag{71}$$

Noting that $D_0^{-1}\boldsymbol{\epsilon}\in L_2^n$, it follows from Lemma 1 that $\mathbf{e}\to 0$ In fact, since $s(s^2I + K_v s + K_p)^{-1}$ is still strictly proper, stable, it immediately follows from Lemma 1 that $\mathbf{e}\to 0$, likewise, and the proof is complete

3 2 3 *Inverse dynamics without joint acceleration measurement* The approaches in the preceding section remove the difficulty of retaining invertibility of the estimated inertia matrix, but still require measurement of the acceleration vector $\dot{\mathbf{q}}$

A reasonable way to remove the acceleration from the regressor is to filter (19) to obtain

$$\boldsymbol{\tau}_f = Y_f(\mathbf{q},\dot{\mathbf{q}})\boldsymbol{\theta} \tag{72}$$

where

$$(\cdot)_f = W(\ ) = \frac{w}{s+w}(\cdot), \quad w>0 \tag{73}$$

Since the acceleration terms appear only in conjunction with $D(\mathbf{q})$, the q_i terms are multiplied by known functions of $\mathbf{q}$ only consequently Y_f contains no acceleration terms If we then define a prediction (or input matching) error

$$\boldsymbol{\epsilon} = Y_f\hat{\boldsymbol{\theta}} - \boldsymbol{\tau}_f \tag{74}$$

$\boldsymbol{\epsilon}$ will clearly satisfy

$$\boldsymbol{\epsilon} = Y_f\tilde{\boldsymbol{\theta}}. \tag{75}$$

Thus any standard parameter update law gives $\boldsymbol{\epsilon}\in L_2^n\cap L_\infty^n$ and $\tilde{\boldsymbol{\theta}}\in L_\infty^r$ The problem now is how to relate the properties of $\boldsymbol{\epsilon}$ to properties of the tracking error $\mathbf{e}$ This problem has been solved in Middleton and Goodwin (1988) with the introduction of two clever modifications to the control law First, to account for the effect of the filtering, the controller parameters $\hat{\theta}_i$ are replaced by

$$P_w(\hat{\theta}_i) = W^{-1}\hat{\theta}_i W \tag{76}$$

with W the filter defined by (73) This same idea was used in Narendra *et al* (1980) to prove stability of model reference adaptive control of systems with relative degree two It is easy to see that

$$P_w(\hat{\theta}_i) = \hat{\theta}_i + \frac{1}{w}\dot{\hat{\theta}}_i w \tag{77}$$

Hence the implementation is possible with knowledge of $\dot{\hat{\theta}}_i$ The second modification introduced in Middleton and Goodwin (1988) is needed to account for the noncommutativity of the operator algebra, for example, interchange of filtering and multiplication This modification is based on the following swapping property

$$W^{-1}(\hat{D}^{-1}\boldsymbol{\epsilon}) = \frac{1}{w}\left[\frac{\mathrm{d}}{\mathrm{d}t}(\hat{D}^{-1})\right]\boldsymbol{\epsilon} + \hat{D}^{-1}W^{-1}(\boldsymbol{\epsilon}) \tag{78}$$

The controller is then given by

$$\boldsymbol{\tau} = \hat{D}\mathbf{a} + \hat{C}\dot{\mathbf{q}} + \hat{\mathbf{g}} + \left\{\frac{1}{w} Y_f\hat{\dot{\boldsymbol{\theta}}} + \frac{1}{w}\hat{D}\left[\frac{d}{dt}(\hat{D}^{-1})\boldsymbol{\epsilon}\right]\right\} \tag{79}$$

where the terms inside the braces are the modifications mentioned above We note that for implementation purposes the last term of (79) may be written more simply using the identity

$$\hat{D}\frac{d}{dt}(\hat{D}^{-1}) = -\hat{\dot{D}}\hat{D}^{-1} \tag{80}$$

The motivation for the modifications in (79) become clear by applying W^{-1} to (75)

$$W^{-1}\boldsymbol{\epsilon} = Y\hat{\boldsymbol{\theta}} + \frac{1}{w} Y_f\hat{\dot{\boldsymbol{\theta}}} - \boldsymbol{\tau} \tag{81}$$

which, after substitution of (79) gives

$$W^{-1}(\hat{D}^{-1}\boldsymbol{\epsilon}) = (s^2 I + K_v s + K_p)\mathbf{e} \tag{82}$$

where we have used (45), the swapping identity (78), and (80) The proof that $\mathbf{e} \to 0$ as $t \to \infty$ follows immediately from Lemma 1 since $\boldsymbol{\epsilon} \in L_2^n$ and $\hat{D}^{-1}$ is bounded An argument similar to that used in Theorem 1 can be used to conclude also that $\dot{\mathbf{e}} \to 0$ as $t \to \infty$

4 PASSIVITY BASED CONTROL METHODS

We next investigate control schemes that exploit the skew symmetry (Property 4) These results, in general, do not lead to a linear system in the closed loop even in the ideal case that all parameters are known exactly The main motivation for these schemes is that, as will be shown, they lead in the adaptive case to error equations where the regressor is independent of the joint acceleration As before we first investigate the control of (17) in the ideal case that all parameters are completely known

4 1 *A general theorem*

The following theorem will be used to unify several of the adaptive control results considered as special cases of a more general result

Theorem 3 Let $t \to \mathbf{q}^d(t)$ be a given twice differentiable function, and define $\mathbf{e}(t) = \mathbf{q}(t) - \mathbf{q}^d(t)$ Consider the differential equation

$$D(\mathbf{q})\dot{\mathbf{r}} + C(\mathbf{q}, \mathbf{q})\mathbf{r} + K_v\mathbf{r} = \boldsymbol{\Psi} \tag{83}$$

where D, C are as in (17), $K_v = K_v^T > 0$, $\mathbf{r}$ is given by

$$\mathbf{r} = F(s)^{-1}\mathbf{e} \tag{84}$$

where $F(s)$ is strictly proper, stable, and the mapping $-\mathbf{r} \to \Psi$ is passive, i e

$$\int_0^T -\mathbf{r}^T(t)\Psi(t)dt \geq -\beta \tag{85}$$

for all T and for some $\beta \geq 0$ Then $\mathbf{e} \in L_2^n \cap L_\infty^n$, $\mathbf{e} \in L_2^n$, $\mathbf{e}$ is continuous and $\mathbf{e} \to 0$ as $t \to \infty$ In addition, if Ψ is bounded, then $\mathbf{r} \to 0$ as $t \to \infty$ and, consequently, $\dot{\mathbf{e}} \to 0$

Proof Consider the function V defined by

$$V = \tfrac{1}{2}\mathbf{r}^T D(\mathbf{q})\mathbf{r} + \beta - \int_0^t \mathbf{r}^T(\tau)\Psi(\tau)\,d\tau \tag{86}$$

and note from (85) that $V \geq 0$ Differentiating V along trajectories of (83) gives

$$V = \mathbf{r}^T D(\mathbf{q})\mathbf{r} + \tfrac{1}{2}\mathbf{r}^T \dot{D}(\mathbf{q})\mathbf{r} - \mathbf{r}^T(t)\Psi(t) \tag{87}$$

Substituting for $D(\mathbf{q})\dot{\mathbf{r}}$ from (83) gives

$$\begin{aligned} V &= -\mathbf{r}^T K_v\mathbf{r} + \tfrac{1}{2}\mathbf{r}^T(\dot{D}(\mathbf{q}) - 2C(\mathbf{q}, \mathbf{q}))\mathbf{r} \\ &= -\mathbf{r}^T K_v\mathbf{r} \end{aligned} \tag{88}$$

by Property 4 Therefore $\mathbf{r} \in L_2^n$ and it follows from Lemma 1 that $\mathbf{e} \to 0$ and $\mathbf{e}$ is bounded The proof that $\dot{\mathbf{e}} \to 0$ if Ψ is bounded is similar to the proof of Theorem 1

Remarks

(1) We note in (88) that it is important to use the particular choice of C that makes $D - 2C$ skew symmetric

(2) It is also important to note, since $F(s)$ is strictly proper, that $\mathbf{r} = F(s)^{-1}\mathbf{e}$ contains derivatives of $\mathbf{e}$, and hence, derivatives of $\mathbf{q}$ If $F(s)$ has relative degree one, then $\mathbf{r}$ contains only the first derivative of $\mathbf{e}$ and consequently does not depend on the acceleration $\ddot{\mathbf{q}}$

(3) An alternative approach to prove Theorem 3 is contained in Kelly *et al* (1988) by invoking the passivity theorem (Desoer and Vidysagar, 1975), and using Lemma 1 In this case one can immediately show L_2-stability of the overall system but additional arguments similar to the one above are needed to establish boundedness and convergence to zero of the signals

4 2 *Known parameter case*

Using Theorem 3 we can attempt to find a control law $\boldsymbol{\tau}$ for (17) that results in an equation of the form (83) In the known parameter case we see that the choice

$$\boldsymbol{\tau} = D(\mathbf{q})\mathbf{a} + C(\mathbf{q}, \dot{\mathbf{q}})\mathbf{v} + \mathbf{g}(\mathbf{q}) - K_v(\mathbf{q} - \mathbf{v}) \tag{89}$$

when substituted into (83), results in

$$D(\mathbf{q})\dot{\mathbf{r}} + C(\mathbf{q}, \mathbf{q})\mathbf{r} + K_v\mathbf{r} = 0 \tag{90}$$

if we define $\mathbf{r}$ as

$$\mathbf{r} = \dot{\mathbf{q}} - \mathbf{v} \tag{91}$$

If we now define $\mathbf{v}$ and $\mathbf{a}$ as

$$\mathbf{v} = \dot{\mathbf{q}}^{\mathrm{d}} - sK(s)\mathbf{e}, \quad \mathbf{a} = \dot{\mathbf{v}} = \ddot{\mathbf{q}} - K(s)\mathbf{e} \tag{92}$$

for a given compensator $K(s)$, then $\mathbf{a}$ is identical to (38), and $\mathbf{r}$ becomes

$$\mathbf{r} = (sI + sK(s))\mathbf{e} = F(s)^{-1}\mathbf{e} \tag{93}$$

Now, if the transfer function $K(s)$ is chosen so that $F(s)$ is strictly proper, stable, it follows from Theorem 3 that $\mathbf{e}, \dot{\mathbf{e}} \to 0$. If, in addition $F(s)$ has relative degree 1, then implementation of the control law $\boldsymbol{\tau}$ from (89) requires only joint position and velocity measurements

4 3 *Adaptive version*

The adaptive version of the above result proceeds as follows Given the system dynamics (17) we choose the control law

$$\boldsymbol{\tau} = \hat{D}(\mathbf{q})\mathbf{a} + \hat{C}(\mathbf{q}, \dot{\mathbf{q}})\mathbf{v} + \hat{\mathbf{g}}(\mathbf{q}) - K_v\mathbf{r}. \tag{94}$$

Substituting this into system (17) gives

$$D\ddot{\mathbf{q}} + C\dot{\mathbf{q}} + \mathbf{g} = \hat{D}\mathbf{a} + \hat{C}\mathbf{v} + \hat{\mathbf{g}} - K_v\mathbf{r} \tag{95}$$

Now, since $\ddot{\mathbf{q}} = \dot{\mathbf{r}} + \mathbf{a}$ and $\dot{\mathbf{q}} = \mathbf{r} + \mathbf{v}$ we can write (95) as

$$\begin{aligned} D\dot{\mathbf{r}} + C\mathbf{r} + K_v\mathbf{r} &= \tilde{D}\mathbf{a} + \tilde{C}\mathbf{v} + \tilde{\mathbf{g}} \\ &= Y(\mathbf{q}, \dot{\mathbf{q}}, \mathbf{v}, \mathbf{a})\tilde{\boldsymbol{\theta}} := \Psi \end{aligned} \tag{96}$$

Note that the regressor function Y does not depend on the manipulator acceleration, but only on $\mathbf{v}$ and $\mathbf{a}$, which depend on the velocity and acceleration of the reference trajectory.

In order to apply Theorem 3 we need to define a parameter update law in such a way that the mapping $-\mathbf{r} \to \Psi$ in (96) is passive We therefore choose the parameter adaptation law

$$\dot{\tilde{\boldsymbol{\theta}}} = -\Gamma^{-1}Y^T\mathbf{r} \tag{97}$$

for some symmetric, positive definite matrix Γ Then, from (96), (97) we have

$$\mathbf{r}^T\Psi = \mathbf{r}^TY\tilde{\boldsymbol{\theta}} = -\dot{\tilde{\boldsymbol{\theta}}}^T\Gamma\tilde{\boldsymbol{\theta}} \tag{98}$$

and, hence

$$\begin{aligned} -\int_0^t \mathbf{r}^T\Psi \, \mathrm{d}\tau &= \int_0^t \dot{\tilde{\boldsymbol{\theta}}}^T\Gamma\tilde{\boldsymbol{\theta}} \, \mathrm{d}\tau \\ &= \frac{1}{2}\int_0^t \frac{\mathrm{d}}{\mathrm{d}\tau}(\tilde{\boldsymbol{\theta}}^T\Gamma\tilde{\boldsymbol{\theta}}) \, \mathrm{d}\tau \\ &= \tfrac{1}{2}\tilde{\boldsymbol{\theta}}(t)^T\Gamma\tilde{\boldsymbol{\theta}}(t) - \tfrac{1}{2}\tilde{\boldsymbol{\theta}}(0)^T\Gamma\tilde{\boldsymbol{\theta}}(0) \\ &\geq -\tfrac{1}{2}\tilde{\boldsymbol{\theta}}(0)^T\Gamma\tilde{\boldsymbol{\theta}}(0) \end{aligned} \tag{99}$$

and the mapping $-\mathbf{r} \to \Psi$ is passive Therefore, $\mathbf{r} \in L_2^n$, and $\mathbf{e} \to 0$ by Theorem 3 If we take $\beta = \frac{1}{2}\tilde{\boldsymbol{\theta}}(0)^T\Gamma\tilde{\boldsymbol{\theta}}(0)$ in (86) and note that $V \in L_\infty$, then we conclude that $\tilde{\boldsymbol{\theta}} \in L_\infty^r$ and $\mathbf{r} \in L_\infty^n$ From (96) it follows that $\Psi \in L_\infty^n$ and the rest follows from Theorem 3

4 3 1 *Special cases* From the general result that we have proved (Theorem 3) it is now straightforward to recover, and hence unify, the algorithms of Slotine and Li (1987a,b), Sadegh and Horowitz (1987), and Kelly and Carelli (1988) It turns out that the choice

$$K(s) = \frac{1}{s}\Lambda \tag{100}$$

in (92) where Λ is a diagonal matrix with positive diagonal elements, leads to the algorithm of Slotine and Li (1987a,b) In this case

$$F(s) = (sI + \Lambda)^{-1} \tag{101}$$

If, on the other hand, we choose an outer loop PID control law

$$K(s) = K_p + K_d s + \frac{K_I}{s} \tag{102}$$

we obtain the scheme of Sadegh and Horowitz (1987)

The control law proposed in Kelly and Carelli (1988) is given by

$$\boldsymbol{\tau} = \hat{D}\mathbf{a} + \hat{C}\left(\frac{1}{w}\mathbf{a}_f + \dot{\mathbf{q}}_f\right) + \hat{\mathbf{g}} \tag{103}$$

with $\mathbf{a}_f$, $\mathbf{q}_f$ defined by the filter (73) Compare this with (89) The motivation behind this scheme is that (103) can be written as an inverse dynamics control with a compensation term, i e

$$\boldsymbol{\tau} = \hat{D}\mathbf{a} + \hat{C}\dot{\mathbf{q}} + \hat{\mathbf{g}} - \frac{1}{w}\hat{C}\mathbf{r}_f \tag{104}$$

with $\mathbf{r}_f$ as in (73) The error equations for this controller are derived replacing (104) in (171)

$$D\dot{\mathbf{r}} + \frac{1}{w}C\dot{\mathbf{r}}_f = Y\tilde{\boldsymbol{\theta}} \tag{105}$$

or equivalently

$$D\left(\frac{1}{w}\dot{\mathbf{r}}_f + \mathbf{r}_f\right) + \frac{1}{w}C\dot{\mathbf{r}}_f = Y\tilde{\boldsymbol{\theta}} \tag{106}$$

Choosing a gradient update law

$$\dot{\tilde{\boldsymbol{\theta}}} = -\Gamma Y^T\dot{\mathbf{r}}_f, \quad \Gamma = \Gamma^T > 0 \tag{107}$$

and noting that D is bounded, we see that (106), (107) also fit into the framework of Theorem 3 Therefore, global convergence of the adaptive scheme follows

5 EXTENSIONS AND OPEN PROBLEMS

All of the previous schemes insure asymptotic tracking of a desired reference trajectory for all possible initial conditions and with all external

signals remaining bounded As shown above, the weakest hypotheses under which global asymptotic stability can be established are that the robot be described by (17) and satisfy properties 1–4 (or Properties 1–3 if one is willing to use the (filtered) acceleration) There are, however, several practical issues which remain to be investigated First, the results say very little about the transient performance, only that the signals "remain bounded" Second, since asymptotic stability has not been proved to be uniform, small changes in the dynamics may result in loss of stability Remember the celebrated counterexamples of Rohrs (Rohrs *et al*, 1985) On the other hand, small unmodeled bounded disturbances may cause unacceptably large (but bounded) deviations from the desired response (bursting phenomena) As shown in Reed and Ioannou (1987), suitably "tailored" bounded disturbances can even drive the system unstable In this section we will discuss some of the issues involved and some of the possible modifications proposed to alleviate these fundamental problems

5 1 *Persistency of excitation*

The sensitivity to disturbances can be overcome by requiring that the regressor signals be persistently exciting so as to guarantee uniform asymptotic stability of the controller parameters or parameter convergence Some results along these lines have been reported in Craig *et al* (1986), and Slotine and Li (1987b) For the inverse dynamics schemes of Theorem 1 it can be shown that parameter convergence is attained if $B^TP(sI-A)^{-1}B$ is strictly positive real, and $Y(\ddot{\mathbf{q}}^d, \mathbf{q}^d, \mathbf{q}^d)$ is persistently exciting Persistency of excitation arguments can also be invoked to determine convergence rates that provide some information on the transient performance

5 2 *Other update laws*

It is widely recognized that, at least locally, the convergence rate of least squares estimates is better than gradient update laws Unfortunately, least squares estimators do not satisfy the passivity property (85) required by the schemes of Section 4 In order to overcome this problem Slotine and Li (1987a,b) recently introduced a least squares parameter update law that uses both the tracking error and the prediction error, i e

$$\dot{\tilde{\boldsymbol{\theta}}} = -F(Y\mathbf{r} + Y_f\boldsymbol{\epsilon}) \tag{108}$$

$$F^{-1} = Y_f^TY_f, \quad F(0) = F(0)^T > 0 \tag{109}$$

Interestingly enough, it is possible to show that this estimator defines a map H_1 $(-\boldsymbol{\epsilon}, \mathbf{r}) \to (Y_f\tilde{\boldsymbol{\theta}}, Y\tilde{\boldsymbol{\theta}})$ with the required input/output properties, i e

$$V_1(T) = \langle Y_f\tilde{\boldsymbol{\theta}} \mid -\boldsymbol{\epsilon}\rangle_T + \langle Y\tilde{\boldsymbol{\theta}} \mid -\mathbf{r}\rangle_T + \frac{1}{2}\int_0^T \|Y_f\tilde{\boldsymbol{\theta}}\|^2\,dt \geq -\beta \tag{110}$$

where

$$\beta = \tfrac{1}{2}\tilde{\boldsymbol{\theta}}(0)^TF^{-1}(0)\tilde{\boldsymbol{\theta}}(0) \tag{111}$$

The estimator together with the error equation (96) defines a feedback system Replacing this functional in (86) of Theorem 3 allows us to conclude global stability of the overall adaptive system

It is worth mentioning that the choice of the estimator in the schemes of Section 4 is only restricted by the passivity property Therefore, adaptation laws with proportional terms (Landau and Horowitz, 1988) and freezing capabilities (Kelly *et al*, 1988) also provide globally stable schemes An issue that remains to be addressed, possibly with a benchmark example, is the comparison of the relative merits of these different control configurations and estimators Another problem of particular practical interest is the use of discrete-time update laws to reduce the computational burden Some results in this respect have been reported in Hsu *et al* (1987)

5 3 *Robustness*

To address the robustness problem, two avenues of research have been pursued in the adaptive control literature (see, e g Ortega and Yu (1987)) These are local analysis for slow adaptation, and the development of robustified estimators In the first approach it has been shown, e g Anderson *et al* (1986) that useful information of the adaptive system can be obtained by considering small adaptation gains which enforces a time scale separation between the dynamics of the controlled plant and the slowly varying controller parameters In the authors opinion, the specific nature of the robotics problem, with rapidly changing parameters, makes the slow adaptation approach questionable

As opposed to the above approaches, which yield local results, there is also a tendency to develop globally "robust" adaptive controls for black box systems via the introduction of *ad hoc* "fixes" to the estimation law, e g normalization, dead zones, forgetting etc The theory here is basically qualitative and coarse and concentrates on bounded input–bounded state stability, without quantifying the operator gain Such approaches, although important, overlook such effects as extreme sensitivity to tuning parameters and initial conditions and the presence of unpleasant oscillatory solutions (see e g Praly

(1988)). Nevertheless we believe that such techniques will be useful for the practical solution of some adaptive robotic control problems if the structure of the uncertainty is suitably exploited in the design

In the context of adaptive control of manipulators it is realistic and relevant to consider the robustness with respect to at least four major perturbations bounded disturbances, flexibility (particularly joint flexibility), actuator dynamics, and friction (See Sweet and Good (1984).) Robustness here is understood as the preservation of the stability properties and, it is hoped, control performance as well, under small perturbations

In a recent report Reed and Ioannou (1987) introduced a switching integrator leakage (σ-modification) in the estimator to study the problem of *bounded disturbances* and *unmodeled actuator dynamics* The controller structure of Craig *et al* (1986) and Slotine and Li (1987a) was considered in the above paper. The usual dynamics of a permanent magnet d c motor were included in the system description, i e

$$\begin{aligned} J_m\ddot{\mathbf{q}} + B_m\dot{\mathbf{q}} + N\boldsymbol{\tau} &= K_T I \\ L_a I + R_a I &= -K_e\dot{\mathbf{q}} + u \end{aligned} \tag{112}$$

where u, and I are the armature voltage and current, respectively, J_m, B_m the rotor inertia and damping, L_a, R_a the armature inductance and resistance, N the gear ratio, and K_T, K_e are proportionality constants

The basic idea is to treat the inductive motor time constant L_a/R_a as a small parasitic assuming that it is $O(\mu)$, where $\mu \ll 1$ Then invoking the robustness of the switching σ-modified estimator (Ioannou and Tsakalis, 1986) to weakly observable parasitics and bounded disturbances, conditions can be given that ensure boundedness of the solutions Specifically, one can show, after some straightforward calculations, that (17), (112) can be written as

$$D_A\ddot{\mathbf{q}} + C_A\dot{\mathbf{q}} + \mathbf{g} = u + \eta \tag{113}$$

$$\eta = \mu H_1(s)u + \mu H_2(s)\ddot{\mathbf{q}} \tag{114}$$

where H_1, H_2 are strictly proper stable transfer functions such that

$$\mu H_i(s)\,|_{\mu=0} = 0 \tag{115}$$

and D_A, C_A include the effective motor inertia and motor damping together with the rigid body equations of the robot

The following result can be established for the perturbed system (113) and (114) with either one of the controllers mentioned above and the parameters updated with a switching σ-modified estimator

Theorem 4 There exists $\mu^* > 0$ such that for $\mu \in [0, \mu^*]$, all solutions with initial conditions inside a suitable neighborhood of the origin are bounded

Global asymptotic tracking is recovered in the limit as $\mu \to 0$ An upperbound on the norm of the robot parameters is required for the estimator implementation

The effect of *joint flexibility* on existing adaptive controllers is an interesting and highly non-trivial problem In this case an n-link robot has $2n$ degrees of freedom, represented by the motor shaft angles and the link angles, which are coupled through the joint flexibility This system can be modeled as (Spong, 1987)

$$D(\mathbf{q}_1)\ddot{\mathbf{q}}_1 + C(\mathbf{q}_1, \dot{\mathbf{q}}_1)\dot{\mathbf{q}}_1 + \mathbf{g}(\mathbf{q}_1) + K(\mathbf{q}_1 - \mathbf{q}_2) = 0 \tag{116}$$

$$J\ddot{\mathbf{q}}_2 + B\dot{\mathbf{q}}_2 - K(\mathbf{q}_1 - \mathbf{q}_2) = \boldsymbol{\tau} \tag{117}$$

where $\mathbf{q}_1$ and $\mathbf{q}_2$ represent the link and motor angles, respectively, J the actuator inertias and K the joint stiffness In this case there is no longer an independent control input for each degree of freedom and the mapping $\boldsymbol{\tau} \to \dot{\mathbf{q}}_1$ is no longer passive Thus, both Properties 2 and 4 are lost As a result *none* of the schemes in this paper can be used to control the flexible joint system (116) and (117) independent of the joint stiffness In the case that the joint stiffness is large (i e $O(1/\epsilon^2)$) Spong (1989) has shown that any of the schemes of this paper may be used to control (116) and (117) provided an $O(1/\epsilon)$ damping term is added to the control law to damp out the elastic oscillations due to the joint flexibility In other words, with a control law of the form

$$\boldsymbol{\tau} = \boldsymbol{\tau}_r + K_v(\dot{\mathbf{q}}_1 - \mathbf{q}_2) \tag{118}$$

where $\boldsymbol{\tau}_r$ is one of the rigid control laws treated in this paper and K_v is $O(1/\epsilon)$, the closed-loop system exhibits a two-time scale behavior wherein the elastic oscillations at the joints decay in a fast time scale as a result of the high gain damping term after which the response of the system is nearly the same as that of a rigid robot with the rigid control law $\boldsymbol{\tau}_r$

Friction has a significant effect on the performance of many robot manipulators, particularly those with gear reduction, mainly because the functional dependence of the friction on the joint variables is difficult to model In the case of viscous friction, i e affine dependence on $\dot{\mathbf{q}}$, both the inverse dynamics and passivity based adaptive schemes can easily be modified to account for friction A less restrictive assumption on the nature of the

friction force $\mathbf{f}$ is dissipativity, i e

$$\int_0^T \mathbf{q}^T \mathbf{f}\, dt \geq 0$$

In this case Theorem 3 is still valid and insures global convergence for friction satisfying

$$\int_0^T \mathbf{v}^T \mathbf{f}\, dt \leq 0$$

Other results on adaptive friction compensation have been reported in Canudas *et al* (1986)

6 CONCLUSIONS

Our understanding of the adaptive control problem for rigid robots has matured considerably in the last few years with the publication of several globally convergent adaptative algorithms In this paper we have given a tutorial account of these results Further work is necessary to understand completely the effects of unmodeled dynamics, bounded disturbances, etc on the algorithms presented here Also the problems of adaptive compliant motion control, i e impedance and force control, and the coordinated control of multi-robot systems are less understood than the problem of pure position control and are ripe for investigation in this context The problem of direct end-point sensing, such as with vision systems or tactile sensors, also contains many challenging research problems Finally, one might attempt to incorporate these adaptive control schemes into so-called learning algorithms (Craig, 1988) in the hopes of developing and defining the much-touted but elusive term intelligent control system

Acknowledgement—This research was partially supported by the National Science Foundation under Grant No 85-16091

REFERENCES

Amestegui, M , R Ortega and J M Ibarra (1987) Adaptive linearizing-decoupling robot control a comparative study of different parametrizations *Proc 5th Yale Workshop on Applications of Adaptive Systems Theory*, New Haven, Connecticut

An, C H , C G Atkeson and J M Hollerbach (1985) Estimation of inertial parameters of rigid body links of manipulators *Proc IEEE Conf on Decision and Control*, Fort Lauderdale, Florida

Anderson, B D O *et al* (1986) *Stability of Adaptive Systems Passivity and Averaging Analysis* MIT Press, Cambridge, Massachusetts

Balestrino, A , G De Maria and L Sciavicco (1983) An adaptive model following control for robotic manipulators *J Dyn Syst Meas Control*, **105**, 143–151

Canudas, C , K J Astrom and K Braun (1986) Adaptive friction compensation in DC motor drives *Proc IEEE Robotics and Automation Conf*, San Francisco, California

Craig, J J , Pl Hsu and S Sastry (1986) Adaptive control of mechanical manipulators *IEEE Int Conf on Robotics and Automation*, San Francisco, California, March

Craig, J J (1988) *Adaptive Control of Mechanical Manipulators* Addison-Wesley, Reading, Massachusetts

Desoer, C and M Vidyasagar (1975) *Feedback Systems Input–Output Properties* Academic Press, New York

Hsia, T C (1986) Adaptive control of robot manipulators a review *IEEE Int Conf on Robotics and Automation*, San Francisco, California

Hsu, P , M Bodson, S Sastry and B Paden (1987) Adaptive identification and control for manipulators without using joint accelerations *Proc IEEE Conf on Robotics and Automation*, Raleigh, North Carolina, pp 1210–1215

Ioannou, P and K Tsakalis (1986) A robust direct adaptive controller *IEEE Trans Aut Control*, **AC-31**(11), 1033–1043

Kelly, R and R Carelli (1988) Input–output analysis of an adaptive computed torque plus compensation control for manipulators *27th IEEE Conf on Decision and Control*, Austin, Texas

Kelly, R , R Ortega and R Carelli (1988) Adaptive motion control design of robot manipulators an input–output approach *Proc IEEE Conf on Robotics and Automation*, Philadelphia, Pennsylvania

Khosla, P and T Kanade (1985) Parameter identification of robot dynamics *IEEE Conf on Decision and Control*, Fort Lauderdale, Florida

Landau, I and R Horowitz (1988) Synthesis of adaptive controllers for robot manipulators using a passive-feedback systems approach *Proc IEEE Conf on Robotics and Automation*, Philadelphia, Pennsylvania

Middleton, R H and G C Goodwin (1988) Adaptive computed torque control for rigid link manipulators *Syst Control Lett* , **10**, 9–16

Narendra, K S , Y Lin and L Valavani (1980) Stable adaptive control design Part II Proof of stability *IEEE Trans Aut Control*, **AC-25**, 440–448

Ortega, R and T Yu (1987) Robustness of direct adaptive controllers a survey *10th IFAC World Conf*, Munich, F R G

Praly, L (1988) Oscillatory behavior and fixes in adaptive linear control, a worked example CAI Ecole de Mines Rapp Int

Reed, J S and P A Ioannou (1987) Instability analysis and robust adaptive control of robotic manipulators University of California, Electrical Engineering Systems, Report 87-09-1

Rohrs, C , M Athans and L Valavani (1985) Robustness of continuous time adaptive control algorithms in the presence of unmodeled dynamics *IEEE Trans Aut Control*, **AC-30**(9), 881–889

Sadegh, N and R Horowitz (1987) Stability analysis of an adaptive controller for robotic manipulators *IEEE Int Conf on Robotics and Automation*, Raleigh, North Carolina

Singh, S N (1985) Adaptive model following control of nonlinear robotic systems *IEEE Trans Aut Control*, **AC-30**(11), 1099–1100

Slotine, J -J E and W Li (1987a) On the adaptive control of robot manipulators *Int J Robotics Res* , **6**(3), 49–59

Slotine, J -J E and W Li (1987b) Adaptive robot control a new perspective *Proc IEEE Conf on Decision and Control*, Los Angeles, California

Spong, M W (1987) Modeling and control of elastic joint manipulators *J Dyn Syst Meas Control*, **109**, 310–319

Spong, M W and M Vidyasagar (1987) Robust linear compensator design for nonlinear robotic control *IEEE J Robotics Aut* , **RA-3**(4), 345–351

Spong, M W (1988) Adaptive control of flexible joint robots *Syst Control Lett* , **13**, 15–21

Spong, M W and R Ortega (1988) On adaptive inverse dynamics control of rigid robots *IEEE Trans Aut Control*, to appear

Spong, M W and M Vidyasagar (1989) *Robot Dynamics and Control* Wiley, New York

Sweet, L M and M C Good (1984) Redefinition of the robot motion control problem effects of plant dynamics, drive system constrains, and user requirements *Proc 23rd IEEE Conf on Decision and Control*, Las Vegas, Nevada